EN

GORGENS







TURBOROTOR-SYSTEM

Mirconising · Mixing · Drying

Grinding - Mixing - Drying

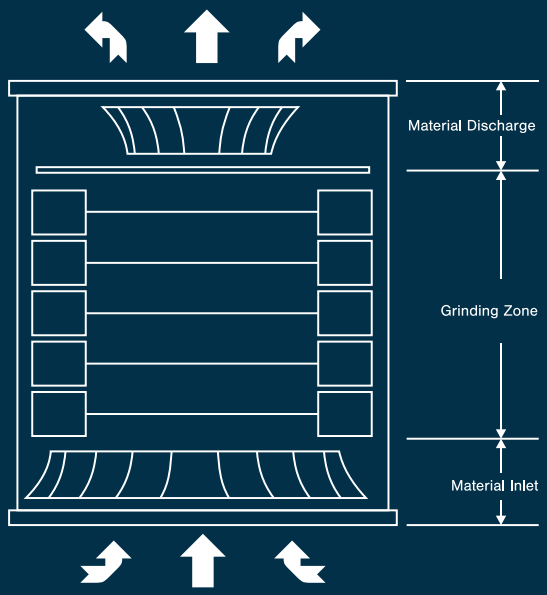

The Micro-Whirl Mill can be divided into three sections:

Material Discharge

For the separation of coarse particles

Grinding Zone

Variable number and geometry of grinding tools, with continuously adjustable rotor speed

Variable residence time and turbulence for high evaporation performance

Material Inlet

Intake of material into the airflow or via a feed screw into the grinding zone

Homogenization and uniform distribution before entering the grinding zone

The TurboRotor-System

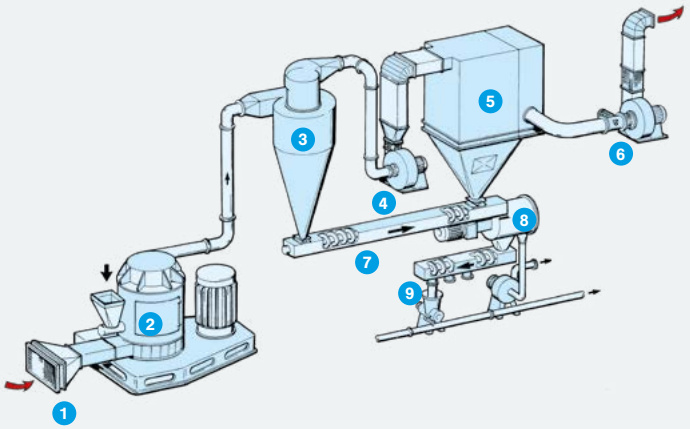

1. Heat Exchanger for cooling or heating the grinding air
2. Micro-Whirl Mill with load-dependent dosing
3. High-Performance Cyclone HFA for pre-separation
4. High-Performance Fan with high total pressure
5. High-Performance Bag Filter with pneumatic low-pressure cleaning
6. High-Performance Fan for volume flow control
7. Collecting Screw
8. Eddy Current Screening Machine for defined particle size limitation
9. Distributing Screw for bagging or pneumatic transport

Grinding of temperature-sensitive products

including thermoplastic plastics, as well as elastic products such as rubber, caoutchouc, waxes, stearates, soaps, and fat-containing products; also those that are doughy, pasty, or hygroscopic at room temperature or tend to smear and stick; as well as more or less moist production waste and, finally, a variety of natural products with a fibrous structure that require significant fineness. Even with difficult-to-process materials, the TurboRotor produces a fine, free-flowing, and pourable powder without the need for additional aids.

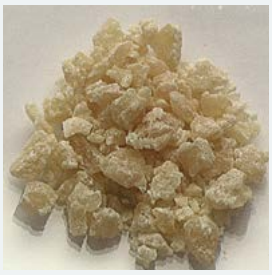

NBR (Input)



NBR (Output)



PVC (Input)



PVC (Output)

Selective Grinding

of material mixtures where one fraction can be ground significantly finer than the other to facilitate subsequent separation, such as aluminum composite films, electronic scrap, stranded cables, and a variety of metal-plastic and/or paper composites. Our scope of supply includes suitable equipment for the near-complete separation of two or more fractions. This also applies to the processing of herbs and spices.



floorheating pipes (pregrinding)



floorheating pipes (Input TurboRotor)



plastic (Output)



aluminium (Output)

Micronisation

particularly of crystalline products, minerals, pigments, coal, sulfur, sugar,and similar materials, which are ground to a fineness of a few microns, sometimes using a dynamic classifier when a narrow particle size distribution is required or when a specific particle size in the micron range must not be exceeded.


cristaline sugar (Input)


icing sugar (Output)


fertilizer (Input)


fertilizer (Output)

Grinding-Spray Drying

Widely used in the food industry, a variety of systems with evaporation capacities of up to 2.5 tons of water per hour are employed. Both mineral suspensions and those from the pigment and chemical industries are processed agglomerationfree.


wheat protein (Input)


wheat protein (Output)

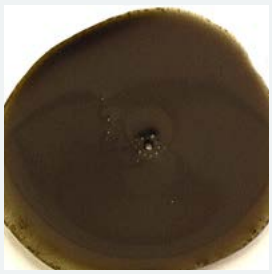
spirulina (Input)


spirulina (Output)

Simultaneous Grinding and Drying

In combination with a heat generator to heat the process air, the TurboRotor can be used as a dryer without structural modifications. Since grinding occurs simultaneously with drying, the product undergoes a rapid increase in surface area, allowing moisture deep within the particles to reach the surface during progressive comminution and evaporate easily. Food products such as proteins, starch, starch derivatives, and other heatsensitive products can be gently ground and dried at low air outlet temperatures without compromising their vitality.



seaalgae (Input)



seaalgae (Output)



phthalocyanin blue (Input)



phthalocyanin blue (Output)

Grinding, Mixing, or Coating

of products from food, cosmetics and pharmaceutical industries, as well as the coating of micronised minerals with stearates or organic products from the food, pharmaceutical, and cosmetics industries with hydrogenated fats or waxes.



aluminum powder



aluminum powder
with 0,5% stearic acid



calcinated caolin



calcinated caolin
with 1% silane

Size	Drivemotor [kW]	Speed [upm]	Air volume flow [m3/h]
G-35	7,5-18	4000-8000	800
G-55	15-55	1800-3600	2000
G-90	45-110	1350-2500	5000
G-130	90-200	1100-1700	8000
G-150	132-315	900-1450	15000
G-180	200-450	800-1200	25000
G-200	315-630	650-1000	50000

The product-contacting parts can be made from different materials, depending on the requirements of the products to be processed. When processing products whose parameters necessitate the use of safety equipment, this is done in accordance with ATEX 94/9/EC.



test station

About us

With our TurboRotor grinding and drying systems, we equally support users from the food and chemical industries. TurboRotor grinding and drying systems are used for the production of final and intermediate products, as well as for the reprocessing of homogeneous production waste, which, after reprocessing, becomes part of high-value final or intermediate products.Since its founding in 1985, Mahltechnik Gorgens GmbH has continuously evolved to meet the growing demands of international markets. We have a well-equipped technical center for simulating a wide range of tasks to design large-scale production systems for ambient and cryogenic grinding, as well as simultaneous grinding and drying.









GORGENS

Mahltechnik Gorgens GmbH
Norfer Strasse 22
D-41539 Dormagen, Germany

+49 (0) 21 33 -24 51 -0
+49 (0) 21 33 -24 51 -44

info@mahltechnik-goergens.de
www.mahltechnik-goergens.de

